HSK100A INTERLOC SHANKS

** Assembles with extensions, reducers, endmill holders and cutterheads **

"INTERLOC DRIVE SYSTEM"

INTERLOC "F" - FEMALE CONNECTION | LENGTH "L" | HSK STYLE

F100-30T2-HSK100A

TAPER STYLE

HSK100A SHANK →

assemble with

CUTTERHEAD →

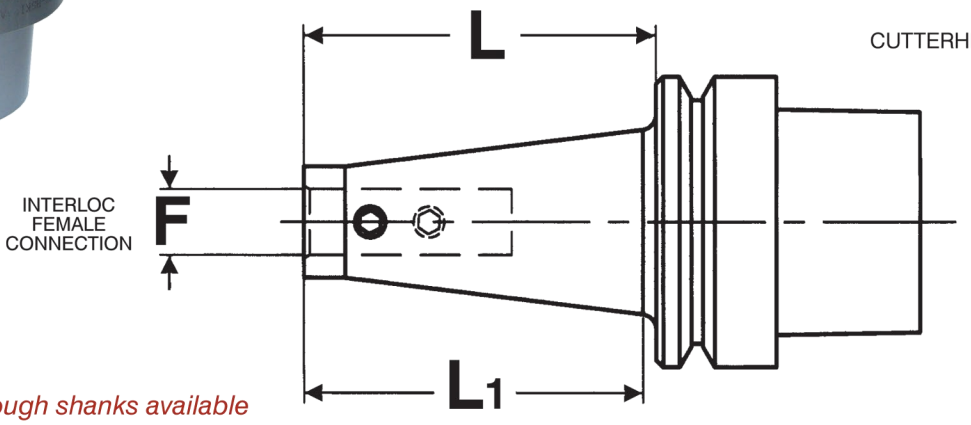

❖ *Cooling through shanks available*

▲ *Custom lengths available*

CATALOG NUMBER	INTERLOC FEMALE CONNECTION (F)	LENGTH (L)	LENGTH (L_1)	LOCK SCREW NUMBER	"T" HANDLE ALLEN WRENCH
F100-30T2-HSK100A	F100 INTERLOC	3.000	2.500	TS-516	5/32
F100-40T2-HSK100A		4.000	3.500		
F100-50T2-HSK100A		5.000	4.500		
F100-75T2-HSK100A		7.500	7.000		
F125-30T2-HSK100A	F125 INTERLOC	3.000	2.500		
F125-40T2-HSK100A		4.000	3.500		
F125-50T2-HSK100A		5.000	4.500		
F125-75T2-HSK100A		7.500	7.000		
F200-35T-HSK100A	F200 INTERLOC	3.500	3.300	TS-375	3/16
F200-45T-HSK100A		4.500	4.300		
F200-55T-HSK100A		5.500	5.300		
F200-75T-HSK100A		7.500	7.300		
F200-30S-HSK100A		3.000	1.800		
F200-40S-HSK100A		4.000	2.800		
F200-50S-HSK100A		5.000	3.800		
F200-75S-HSK100A		7.500	6.300		